AE NO.	AE.-M. CH.-NO.	RENDERUNG DESCRIPTION OF CHANGE	DATUM DATE	BEARB. DRAWN	GEPR. CHECK.	GESEH. APP.

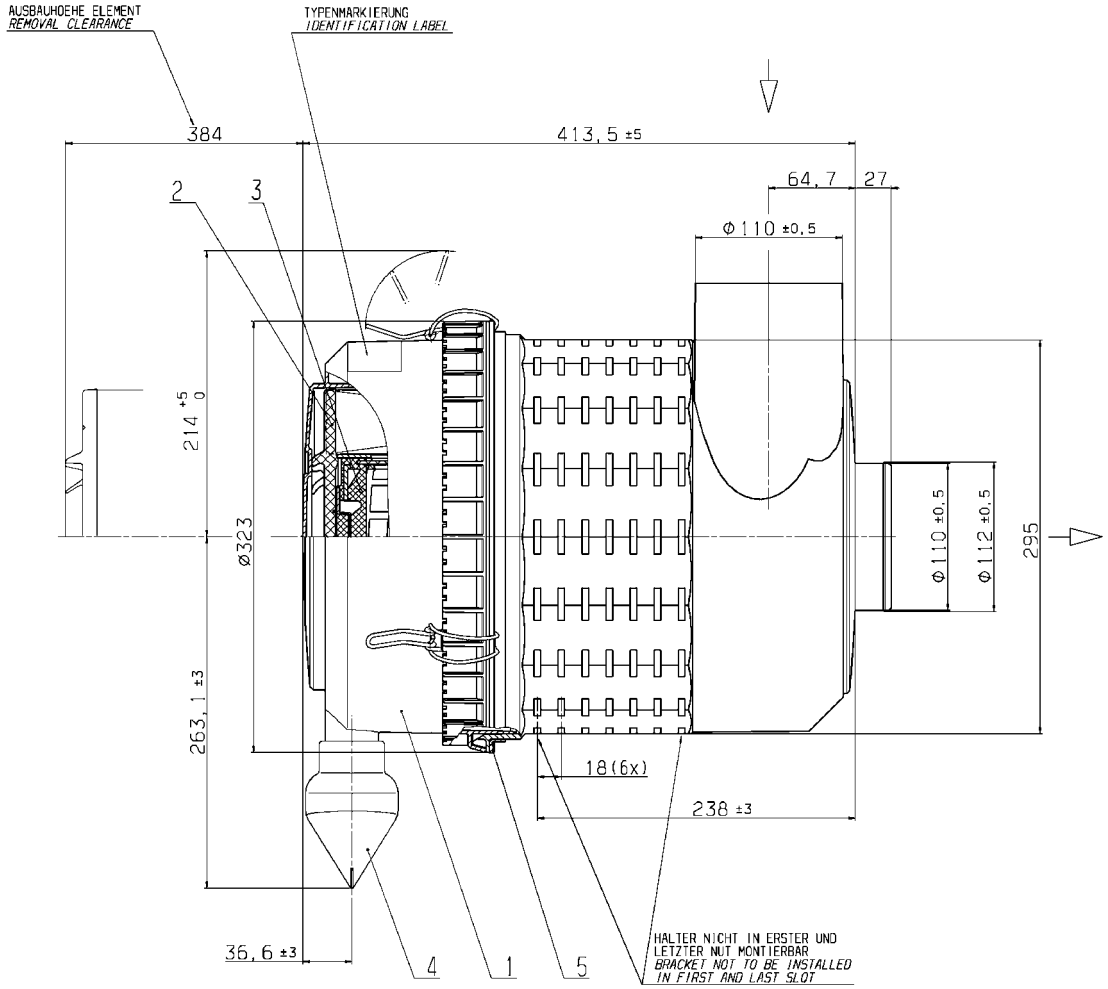

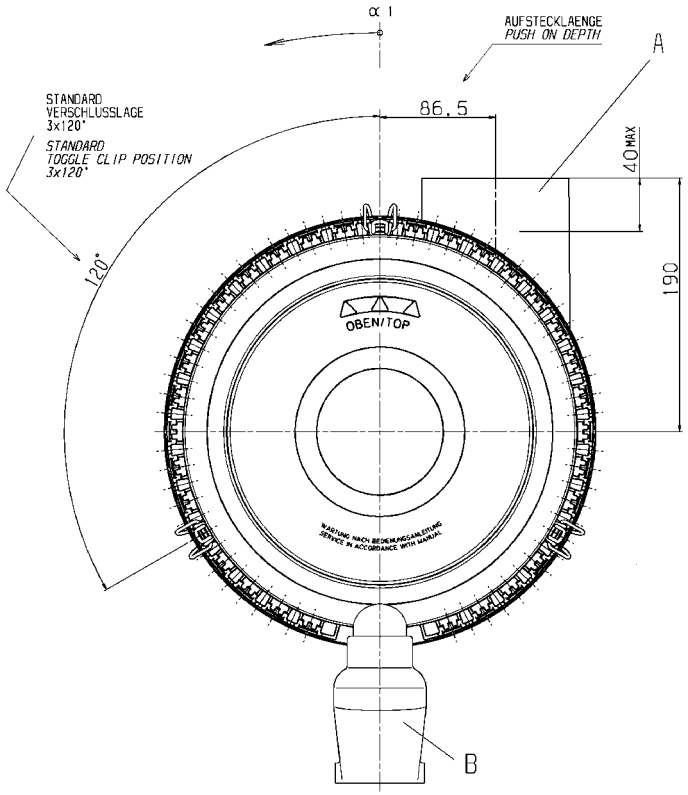

GEHAEUSE: PP, SCHWARZ
HOUSING : PP, BLACK

POS. POS.	BENENNUNG NAME	BESTELL-NR. PART-NO.	FREMD-NR. CUSTOMER-NO.
5	RING RING	45 600 23 109	
4	STAUBENTLEERVENTIL DUST DISCHARGE VALVE	39 000 40 102	
3	SEKUNDAERELEMENT SECONDARY ELEMENT	CF 610	
2	HAUPTELEMENT MAIN ELEMENT	C 23 610	
1	GEHAEUSE U-TEIL VST HOUSING BOTTOM COMPLETE	45 600 17 419	

ERSATZTEILLISTE / SPARE PARTS LIST

FORM- UND LAGETOLERANZEN TOLERANCES OF FORM AND POSITION NACH/ACCORDING TO ISO 1101

OBERFLAECHEN / SURFACES NACH/ACCORDING TO ISO 1302

WERKSTUECKKANTEN WORKPIECE EDGES NACH/ACCORDING TO DIN 6784

MASSE OHNE TOLERANZANGABEN: DIM. WITHOUT TOLERANCES:

LAENGEN LENGTHS	± 2
RADIEN RADII / FASEN CHAMFERS	± —
WINKEL ANGLE	± 2°

PROGRAMM-NR. / PROGRAM-NO. -

CAD-ZEICHNUNG CAD-DRAWING

KUNDENVERMERKE / CUSTOMER NOTICES
Elsässer Filtertechnik GmbH

ISO 128

MASS-STAB SCALE 1:2

ANGEBOTSZEICHNUNG
CUSTOMER DRAWING

SCHUTZVERMERK DIN 34 BEACHTEN / PROTECTION MARK ACCORDING TO DIN 34

THE COPYING, DISTRIBUTION AND UTILIZATION OF THIS DOCUMENT AS WELL AS THE COMMUNICATION OF ITS CONTENTS TO OTHERS WITHOUT EXPRESSED AUTHORIZATION IS PROHIBITED. OFFENDERS WILL BE HELD LIABLE FOR THE PAYMENT OF DAMAGES. ALL RIGHTS RESERVED IN THE EVENT OF THE GRANT OF A PATENT, UTILITY MODEL OR ORNAMENTAL DESIGN REGISTRATION.

	ABT. / DEPT.	DATUM DATE	NAME NAME
	IF-E1		
BEARB. / DRAWN		26.09.02	GRUBER
GEPR. / CHECK.		30.09.02	WINTER
GESEH. / APP.		30.09.02	WINTER

FILTERWERK
MANN+HUMMEL GMBH
D-71631 LUDWIGSBURG

BENENNUNG / NAME
MANN
EUROPICLON
EUROPICLON

ZEICHNUNGS-NR. DRAWING-NO. 45 602 92 941 AE NO. 00

AEHNLICH / SIMILAR

ERSATZ FUER / SUBSTITUTE FOR

A1

SEPTEMBER 30, 2002 12:37